PJ324M
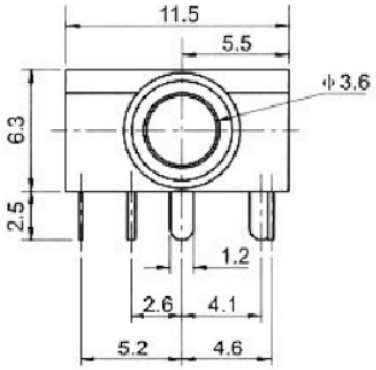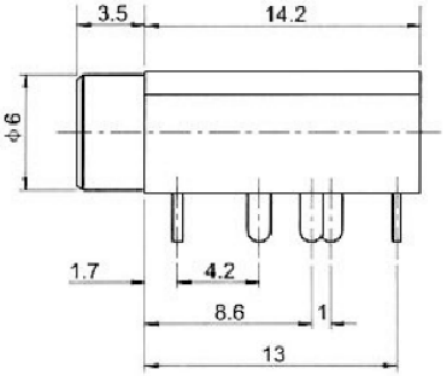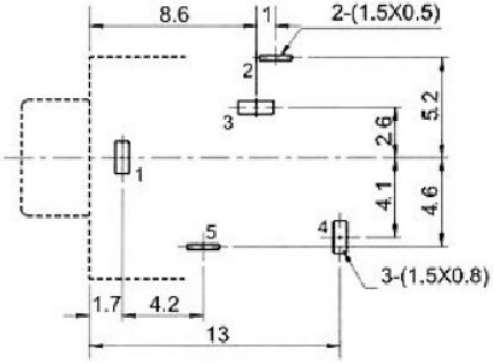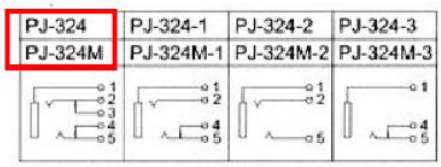
Product	Headphone Stereo jack/Audio connector/5PIN/TH
Product Mode	PJ324M / 3.5mm
Operating Temperature	-30℃ ~70℃
Voltage Rating	500V
Colour	Black